turbosonic
Clean Air for Industry

Catalytic Gas Treatment (CGT)™

VOC Control for MACT Compliance

Patents: US 7,304,187 CA 2,527,450

www.turbosonic.com

Catalytic Gas Treatment (CGT)™ controls emissions of regulated VOCs such as formaldehyde and methanol from process gas streams.

Treating a wide range of alcohols and aldehydes, **CGT** utilizes an environmentally friendly catalytic process to destroy VOCs without the production of harmful combustion-related GHGs and NOx.

CGT utilizes low concentrations of hydrogen peroxide in the presence of twin catalysts to avoid CO_2 and NOx creation, making **CGT** a much more desirable, cost-effective solution than thermal oxidation.

MDF/HDF and Particleboard

CGT Advantages

- No cooling/air dilution required
- Easy operation
- No condensate to treat (water is kept in gaseous state)
- Low electrical consumption
- Low maintenance & operating costs
- Unaffected by temperature variations/no max dryer temperature limit
- No sensitivity to variations in contaminant concentrations
- Small footprint
- No odor generation - **CGT** actually used for odor control

CGT vs. Biofiltration & Thermal Oxidation

	Bio-filtration	Thermal Oxidation	CGT
Avoids combustion-related GHG production	✓		✓
No non-renewable fuel use	✓		✓
Low pressure drop (energy use)			✓
Small footprint			✓
No collateral odor generation		✓	✓
Instant on/off; no standby costs			✓
No sensitivity to temperature		✓	✓
Negligible maintenance cost	✓		✓
May qualify for carbon credits	✓		✓

Economical ▶▶▶ Simple process, minimal maintenance & efficient, low-cost catalytic chemical use.

Eco-friendly ▶▶▶ No additional GHG generation, biodegradable effluent & no by-products or precipitates formed in the recirculation system.

Effective ▶▶▶ **>95%** soluble VOC destruction demonstrated;
>99% particulate removal demonstrated during pre-treatment.

Particulate Pre-treatment, if Required

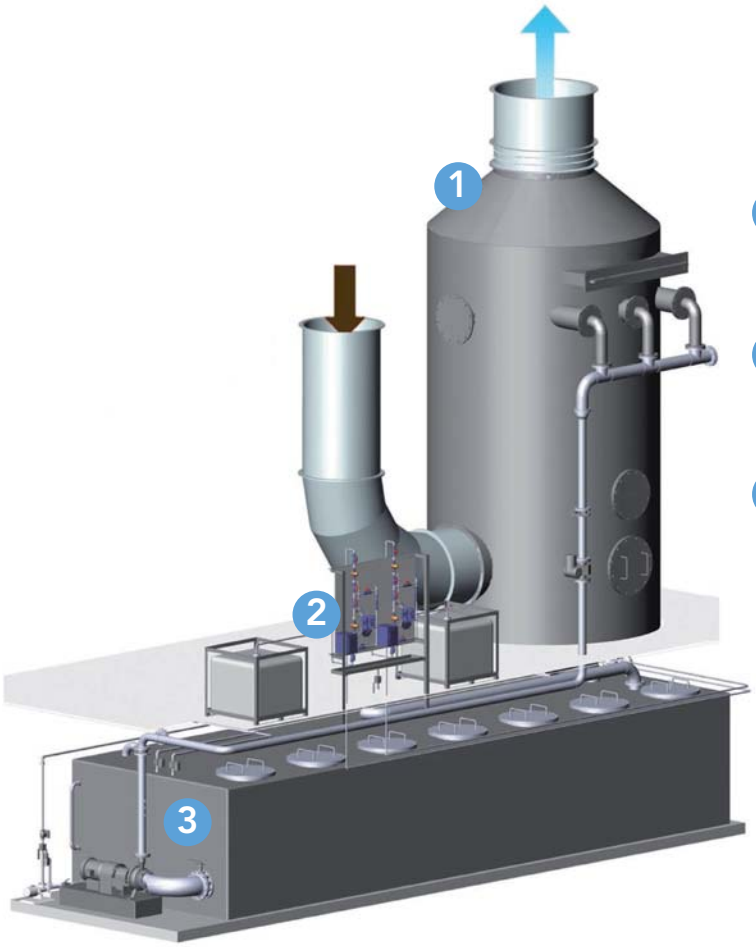

1. **Absorption tower** - enables the solubilization of gases in the reactive environment. Most pollutants are eliminated before the tower's outlet.
2. **Catalyst supply tank** - tank & metering pump system ensures an optimal catalytic level is maintained in the reaction tank.
3. **Reaction tank** - aldehydes (formaldehyde, acrolein, etc.) and other soluble VOCs are oxidized into CO_2 at ~1/50th the level of thermal oxidation.

The reaction takes place quickly, using minimal hydrogen peroxide.

Contact us today to discover how we can help you.

www.**turbo**sonic.com

Catalytic Gas Treatment (CGT)™ Technology for VOC Control

About TurboSonic

For over forty years, industry has relied on TurboSonic for state-of-the-art, cost-effective air pollution control and evaporative cooling systems.

Attention to quality ensures reliable performance for your investment. From project management to spare parts and aftermarket service, you can depend on TurboSonic.

Why Choose **CGT**?

- VOC destruction efficiency >90%
- ROI - payback on investment relative to RTO operation
- Avoids the production of combustion-related GHG emissions such as NOx, CO, CO_2 and methane
- May qualify for carbon credits under proposed cap and trade legislation
- Patented in the USA + 38 additional patents-pending
- Economical, Eco-friendly and Effective

Applications

- Plywood
- OSB
- MDF/HDF
- Particleboard
- Pulp & Paper
- Ethanol
- Pesticides & Fertilizers
- Resins & Plastics
- Petroleum Refining

Contact us today to discover how we can help you.

TurboSonic Inc.

550 Parkside Drive
Suite A-14
Waterloo, ON N2L 5V4
Canada

Tel: (519) 885-5513
Fax: (519) 885-6992

Email: info@**turbo**sonic.com

TurboSonic Technologies, Inc.

172 Mine Lake Court
Suite 200
Raleigh, NC 27615
USA

Tel: (919) 844-0411
Fax: (919) 846-0055

TurboSonic Inc. Italian Branch

VIA IV Novembre, 92
Bollate, Milano, 20021
Italy

Tel: 39-02-38305384
Fax: 39-02-33301943

Email: info.eu@**turbo**sonic.com

turbosonic
Clean Air for Industry

Copyright 2010 TurboSonic Inc. All rights reserved.